J Nondestruct Eval (2010) 29: 181–188
DOI 10.1007/s10921-010-0076-2

Condition Based Structural Health Monitoring and Prognosis of Composite Structures under Uniaxial and Biaxial Loading

Yingtao Liu · Subhasish Mohanty · Aditi Chattopadhyay

Published online: 24 June 2010

Abstract This paper presents a condition based structural health monitoring (SHM) and prognosis approach to estimate the residual useful life (RUL) of composite specimens in real time. On-line damage states, which are estimated using real time sensing information, are fed to an off-line predictive model to update future damage states and RUL. The on-line damage index or damage state at any given fatigue cycle is estimated using correlation analysis. Based on the on-line information of the previous and current damage states, an off-line model is developed to predict the future damage state and estimate the RUL. The off-line model is a stochastic model which is developed based on the Gaussian process approach. In this paper, the condition based prognosis model is used to estimate the cumulative fatigue damage in composite test structures under constant amplitude fatigue loading. The proposed procedure is validated under uniaxial fatigue loading as well as biaxial fatigue loading. Experimental validations demonstrate that the prediction capability of the prognosis algorithm is effective in predicting the RUL under complex stress states.

Keywords Structural health monitoring (SHM) · Prognosis · Damage index · Residual useful life (RUL) · Composite · Uniaxial loading · Biaxial loading

1 Introduction

Research in real time structural health monitoring (SHM) is motivated by the high demands in damage tolerant design and the cost of schedule-based maintenance. Several major challenges need to be addressed to the development of a SHM framework. These include multiscale modeling, accurate damage state awareness models, information management techniques and prognostics of the residual useful life (RUL). Although significant research in this area has been reported in the last decade, several major challenges still remain to be addressed. For example, most of the existing technologies only cover certain aspects of SHM and the performance of the SHM system is limited by the application. These SHM systems have been proved to be useful for simple specimens in term of geometry, but they lack confidence in complicate structural geometries and multiaxial loading conditions. Very few literatures are available on integrated life prognosis model, where a SHM model is integrated with a state predictive model to forecast the future state of the structure. Unlike schedule-based maintenance, the condition-based SHM approaches derive largely from the in-situ assessment of structural integrity and can be used for the advanced warning of structural failure. The integration of condition-based SHM approaches and real-time structural assessment techniques can provide information for the prognosis model to estimate the future remaining life. Such prognosis model could be applied for the automatic detection, diagnosis and prognosis of aerospace and other systems.

Composite materials have been widely used for ground, air and space transportation vehicles for decades. Although the study of fatigue behavior in composites has been a popular research subject over the years, SHM and prognosis of composite structures is still at its infancy. The estimation of the reliability and RUL is important for condition-based system maintenance of composite structures because the composite structural components can be repaired or replaced prior to catastrophic failures. The maintenance costs can also be reduced. Generally, two approaches have been

Y. Liu (✉) · S. Mohanty · A. Chattopadhyay
School of Mechanical, Aerospace, Chemical and Materials Engineering, Arizona State University, Tempe, AZ 85287, USA
e-mail: yingtao.liu@asu.edu

applied to the prognosis of composite structures. They are either physics based or probabilistic data driven based approaches. Physics based approaches model the degradation progress with tuned fatigue parameters. In literature, most research work about physics based fatigue models has been focused on developing phenomenological/empirical models to predict the mechanical properties of composites. Typically, these models describe strength or stiffness degradation during constant amplitude fatigue loading [1, 2]. A detailed review is presented by Delgrieck and Paepegem [3]. However, a major drawback is that extensive experimental data is required to describe these models. In addition, most theoretical models developed for a particular material system need further investigation and evaluation when a different material system is used [4, 5]. Furthermore, even for the same material system, damage mechanisms are different under static loading and fatigue loading [6]. These reasons make the physics based models lack confidence in real life applications. In this context probabilistic data driven based approaches [7, 8] can be used in conjugation with a SHM framework that provides real time state information available only from that structure and under the prevailing loading conditions. Kessler [9] presented the application of Lamb wave techniques to detect damage in quasi-isotropic composite specimens. Different damages, such as delamination, matrix cracks and through-thickness holes, were detected and localized. A detailed review on damage classification using Lamb waves in composite structures is presented by Su et al. [10]. A detailed review on both metallic and composite structure health monitoring is presented by Farrar et al. [11]. Chang et al. [12] discussed a damage localization technique with built-in piezoelectric sensors. It is noted that currently available, physics based propagation approaches are in general based on initial assumption of damage size. However, the composite degradation process is so complex that it is difficult to assume a damage state for developing a damage propagation model. Recently, Gobbato et al. [13, 14] presented a probabilistic mechanics based model which stochastically propagates the damage throughout the joints of unmanned aerial vehicles (UAVs). The future loading conditions were considered as unknown in their work. However, in-situ monitoring of damage states using the state of the art SHM techniques is required to update the initial condition of the damage propagation model in real time. Such condition based damage state forecasting will help to reduce the uncertainty in residual useful life estimation of composite structures. Recently, a condition based integrated prognosis model applied to metallic structure is presented by Mohanty et al. [15, 16]. However, this type approach has not been used for composite structures.

This paper extends the above mentioned prognosis approach to the condition based RUL estimation of composite structures. The fatigue life of composites is divided into discreet short time intervals and it is assumed that the structural damage state and time variable remains the same at each short time interval. The transfer function at a particular discreet instance is a measure of the structural damage condition. The on-line damage states are estimated by correlating real time sensor signals from strain gages placed at different locations on the composite specimens. Once the on-line damage states are estimated, the sensing information is fed to a Gaussian process based off-line predictive model to forecast the future damage states and RUL. The on-line and off-line prognosis model is validated by conducting both uniaxial tensile fatigue test and biaxial fatigue test. Composite beam specimens with introduced notch are used for the uniaxial tensile test and a multi-ply composite cruciform is used for the biaxial fatigue test. During the entire fatigue tests, the loading amplitude is assumed to be constant. Although for the real life applications, the loading conditions during fatigue procedure are not constant, the present assumption of the constant amplitude loading condition during the entire fatigue process is a good start for the research of condition-based life prognosis for composite structures with complex failure mechanism.

2 Damage State Estimation and Prognosis Model

The prognosis model comprises of two primary components: (1) on-line damage state estimation and (2) off-line damage state prediction. The on-line damage state is estimated based on real-time sensor measurements. Once the on-line state information becomes available, it is recursively fed to the off-line damage state predictive model to assess the future damage states and to calculate the associated residual useful life.

The degradation process of composite structures is a complex phenomenon. Both damage types and sizes are time varying in nature, as they change with the loading spectra and the operational life. However, for any composite degradation system, the time varying transfer function or input-output relation can be described as shown in Fig. 1. The transfer function represents the time degrading system at any damage state. As the damage grows in the composite structure, the parameters of the transfer function also change.

The transfer function $H(s)$ can be written as,

$$Y(s) = H(s)X(s) + N(s) \tag{1}$$

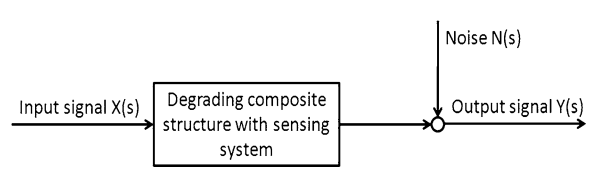

Fig. 1 Transfer function for a general composite degrading system

where, $X(s)$, $Y(s)$ and $N(s)$ are the input, the output and the noise in the Laplace s domain. For discrete-time systems, the transfer function in (1) can be transferred into z domain,

$$Y(z) = b_0 X(z) + b_1 X(z-1) + \cdots + b_M X(z-M) + N(z) \tag{2}$$

where b_m $(m = 0, 1, 2, \ldots, M)$ are the finite impulse response (FIR) coefficients. For composite structures, the fatigue life can be divided into discrete short time intervals and the damage condition in each damage interval is assumed to remain the same. Based on this assumption, according to (2), the lagged cross-correlation coefficients between two sensor signals at any damage state can be expressed as,

$$\gamma_{XY}(m) = b_0 \gamma_{XX}(m) + b_1 \gamma_{XX}(m-1) + \cdots + b_M \gamma_{XX}(m-M); \quad m = 0, 1, 2, \ldots, M \tag{3}$$

where m is the correlation lag number, $\gamma_{XY}(m)$ is the cross correlation coefficient and γ_{XX} is the auto correlation coefficient. The cross-correlation coefficients at different damage states can be obtained from the measured time series input $X(t)$ and output $Y(t)$ in each short time interval. To estimate $(M+1)$ FIR coefficients we need to solve $(M+1)$ algebraic equations given by (3). Solving $(M+1)$ algebraic equations involves inverting a $(M+1) \times (M+1)$ autocorrelation coefficient matrix. For real time application, using this kind of approach to estimate the transfer function at each discrete instance is time consuming and computationally expensive. Rather than explicitly finding all the FIR coefficients and hence the transfer function $H(s)$, in this paper, a direct cross-correlation coefficient based damage index is evaluated. The correlation analysis can significantly reduce the calculation cost. The damage index, which is based on the real time input-output measurements, equivalently estimates the damage state of the composite structure. The damage index DI is expressed as follows:

$$a_n = \sqrt{\frac{\sum_{m=0}^{m=M} (\gamma_{XY}^{n}(m) - \gamma_{XY}^{0}(m))^2}{\sum_{m=0}^{m=M} (\gamma_{XY}^{0}(m))^2}} \tag{4}$$

where n is the damage level indicator, a_n is the defined damage index at the nth level, γ_{XY}^{n} represents the nth level cross-correlation coefficients of input X and output Y and γ_{XY}^{0} represents cross-correlation coefficient at healthy condition, which is used as reference. 1111111111 Once the real time damage state is estimated, the information is sent to a predictive model to forecast the future states of the structure. The predictive model developed is based on Gaussian process (GP) which is the generalization of Gaussian distribution over a function space of infinite dimension [17]. It is parameterized by a mean and a covariance function. With state information available up to nth damage level, the predictive distribution at $(n+1)$th damage level can be given as:

$$P(a_{n+1}, \mathbf{a}_n) = \frac{1}{z} \exp\left(-\frac{(a_{n+1} - \hat{a}_{n+1})^2}{2\sigma_{\hat{a}_{n+1}}^2} \right) \tag{5}$$

$$\hat{a}_{n+1} = k^T \mathbf{K}_n^{-1} \mathbf{a}_n \tag{6}$$

$$\sigma_{\hat{a}_{n+1}}^2 = \kappa - k^T \mathbf{K}_n^{-1} \mathbf{a}_n \tag{7}$$

where $\hat{a}_{n+1}$ is the predictive mean at the $(n+1)$th damage level, and $\sigma_{\hat{a}_{n+1}}$ is the associated error variance of the prediction, $\mathbf{K}_n$ is the $n \times n$ kernel matrix for the vector $\mathbf{a}_n$, κ and k^T are the partitioned components of kernel matrix. The evaluation of (5)–(7) depends on the kernel matrix which is a recursive procedure. The evaluation of kernel matrix not only depends on the history and current structural damage condition, such as the size of delamination, but also depends on the future input conditions. It is noted that theoretically the input conditions should combine the past damage state information and other fatigue parameters such as future loading conditions. However, the present paper demonstrates a condition based prognosis under constant amplitude fatigue loading and under laboratory condition. This led to a statistically process in which the future loading is the same as previous loading. In that case, future loading does not need to be included in the kernel matrix evaluation. By updating the hyperparameters in the kernel matrix, the GP model learns the fatigue dynamics of composite structures. The future loading condition can also be included in the kernel matrix of future damage state prediction model. The details are introduced below.

For the future damage state prediction, the GP model given by (5)–(7) recursively predicts the future damage states based on the last on-line data available. The training data set D and test input vector $a_{n+\tilde{n}}$ can be written as,

$$D = \left[\begin{array}{ccccc|c} \multicolumn{5}{c|}{\overbrace{\hspace{20em}}^{\text{training input data matrix}}} & \overbrace{\hspace{3em}}^{\text{target vector}} \\ a_0 & a_1 & a_2 & \cdots & a_{d-1} & a_d \\ a_1 & a_2 & a_3 & \cdots & a_d & a_{d+1} \\ \vdots & \vdots & \vdots & \cdots & \vdots & \vdots \\ a_{n-d} & a_{n-d+1} & a_{3n-d+2} & \cdots & a_{n-1} & a_n \\ a_{n-d+1} & a_{n-d+2} & a_{3n-d+3} & \cdots & a_n & a_{n+1}^p \\ a_{n-d+1} & a_{n-d+2} & a_{3n-d+3} & \cdots & a_{n+2}^p & a_{n+2}^p \\ \vdots & \vdots & \vdots & \cdots & \vdots & \vdots \\ a_{n-d-1+\tilde{n}}^p & a_{n-d+\tilde{n}}^p & a_{n-d+1+\tilde{n}}^p & \cdots & a_{n-2+\tilde{n}}^p & a_{n-1+\tilde{n}}^p \end{array} \right] \tag{8}$$

$$a_{n+\tilde{n}} = \left[\overbrace{a_{n-d-1+\tilde{n}}^p \quad a_{n-d+\tilde{n}}^p \quad a_{n-d+1+\tilde{n}}^p \quad \cdots \quad a_{n-2+\tilde{n}}^p}^{\text{test input data vector}} \right] \tag{9}$$

where in (8) and (9), a_i $(i = 0, 1, 2, \ldots, n_1 + \tilde{n})$ is the estimated damage index obtained from on-line damage state estimation, the subscript n is the damage level to which the last on-line data is available, the subscript $\tilde{n}$ is the damage level after the availability of the last on-line data and the superscript p indicates the predicted damage index. It is noted that the future loading condition is not introduced into (5)–(8) because it is assumed to be constant during the entire fatigue process. This assumption simplifies the prediction process of the future damage states and RUL estimation. However, for the random loading conditions with known probability distribution, (8) and (9) have to be adequately modified. Future loading amplitude and related probability distribution should be included in (8) and (9). The method proposed in this paper is a self-supervised Gaussian process based approach in which the prognosis model learns the fatigue dynamics through previous and current damage states. Accumulated damage states and RUL subject to constant fatigue loading can be accurately estimated. Other types of damage manners, such as step-like manner, can also be predicted when the prognosis model fully learns this manner by updating the hyper-parameters of the kernel matrix in the model. If a previous training dataset or physics based model can be provided, the prediction accuracy of future damage state and RUL under step-like damage manner can be improved.

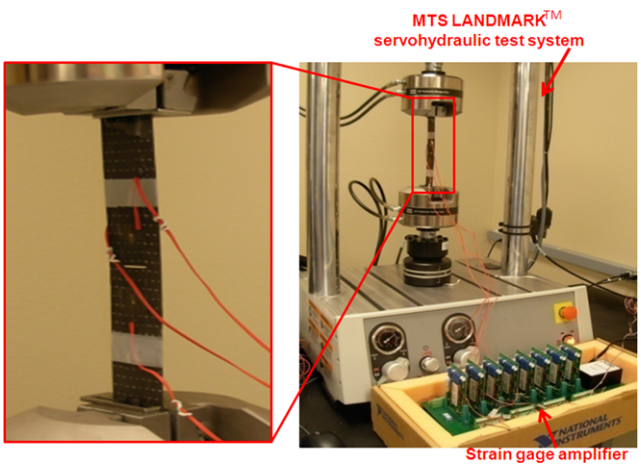

Fig. 2 Four-ply composite plate loaded in a MTS servohydraulic test frame

3 Experimental Results

3.1 Uniaxial Loading Fatigue Tests and Experimental Validation

To numerically validate the prognosis model, a uniaxial tensile fatigue test was performed on a composite beam. The composite specimen loaded on the test frame can be seen in Fig. 2. A four-ply composite beam was selected as the test specimen and was manufactured in-house with unidirectional carbon fiber/epoxy matrix composite materials. The matrix used was HEXION EPON 863 and EPI-CURE 3290. The specimen had a stacking sequence of $[0°/90°]_s$ and its dimensions are shown in Fig. 3a. Three strain gages were mounted on the surface of the specimen, two on the top side and one on the back side of the specimen, as shown in Fig. 3b. The specimen was subjected to constant amplitude fatigue loading with maximum amplitude ($\sigma_{\max}$) of 11 kN and load ratio $R = 0.1$ on a MTS uniaxial fatigue frame operating at a frequency of 10 Hz. It is noted that a 19.05 mm wide notch in the center of the specimen was made to create an initial damage. An Omega OM2-163 strain gage amplifier was used to amplify the strain signals and a 48 channel NI PXI system was used to acquire the strain gage signals. In addition, the initial healthy state and final damaged state of the composite specimen was estimated by using flash thermography (Echo Therm) system. The flash thermo

Fig. 3 Unidirectional composite specimen

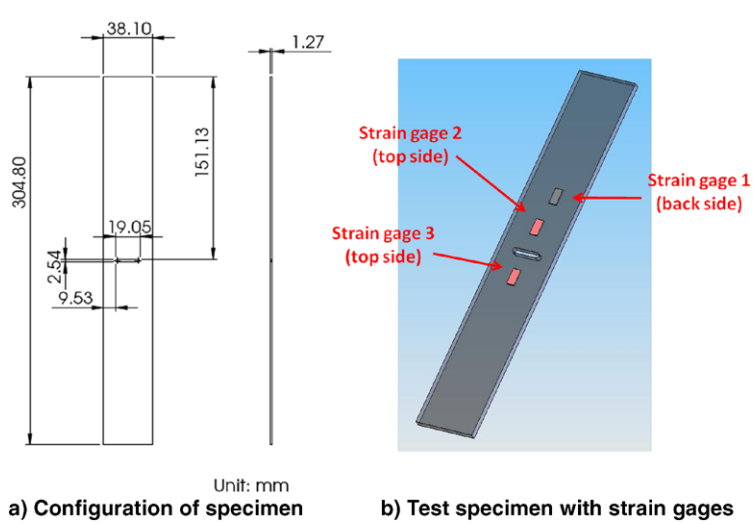

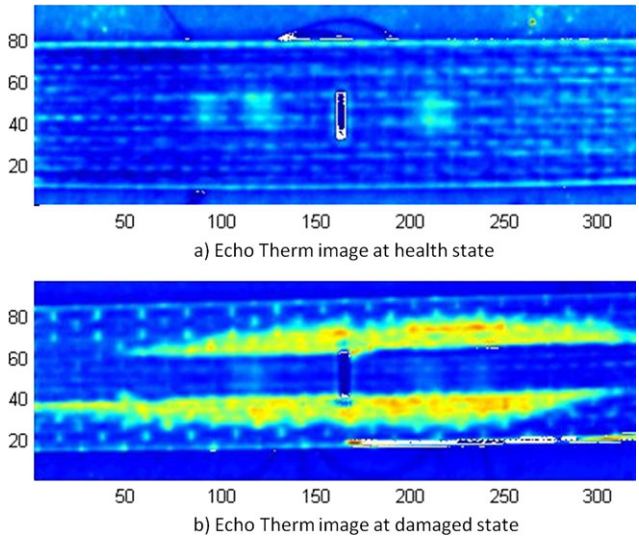

Fig. 4 Echo therm images at health and damaged states

graphic images of the healthy and damaged states are shown in Fig. 4. The developed real time MATLAB based prognosis algorithm was synchronized with the NI data acquisition system (DAQ) to estimate the current damage states and to predict both the future damage states and the residual useful life in real time.

In order to evaluate the damage index in (4), strain signals are mapped as input and output. For this purpose, three strain gages are mounted at different locations of the specimen. As shown in Fig. 3b, strain gage 1 is furthest from the possible damaged area (i.e. area near the notch) compared to both strain gages 2 and 3. This causes the sensitivities of all three strain gages to be different. Strain gages 2 and 3, symmetrically placed around the pre-cut notch, are more sensitive to the damage compared to the strain gage 1. It is noted that the input strain gage should be ideally placed away from the damage area, such that the strain measurements from this gage will be least affected by the damage. To numerically evaluate the proposed damage index, two different cases of input-output mapping, such as case-I: input from sensor 1 and output from sensor 3 and case-II: input from sensor 2 and output from sensor 3, are considered. The estimated time-series damage index at different fatigue cycles is shown in Fig. 5. It is noted from Fig. 5 that both the time-series features show clear trends for damage growth during the entire fatigue process. However, it is seen that the time-series features with measurements from strain gages 1 and 3 is more sensitive compared with measurements from strain gages 2 and 3. The reason is that signals from strain gage 1 remain nearly uniform during the fatigue process whereas strain gages 2 and 3 capture more local strain changes due to fatigue. The damage indices calculated from the correlation between strain gages 1 and 3 are used in the future damage state prediction and RUL estimation. It is noted that

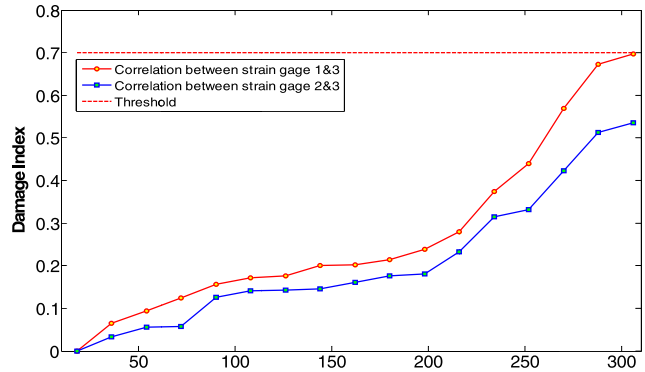

Fig. 5 On-line damage states estimations

the actual damage is equivalent to the damage indices that are estimated from the real time sensor measurements.

Based on (5) to (9), a multi-step ahead prognosis strategy is followed recursively to forecast the future damage state. The prognosis algorithm initiates after a certain damage level (six damage levels in the present case) to collect sufficient previous damage state information. The mean damage index for the next damage level is predicted using (5) and (6). The predicted mean damage index is fed back to the prognosis model to update the training data matrix and the test input vector. The feedback process is continued recursively until the predicted damage index reaches its critical failure value. In the present case the critical damage index is chosen to be 0.7. However, it depends on the user to choose the critical damage index value based on the safety and application requirements. It is noted that damage index value of '1' indicates complete failure. Figure 6 shows the predicted future damage states, 95% confidence intervals and RUL information. It can be also seen that the accuracy of future damage state prediction improves as more and more experimental information (such as strain measurements and the corresponding estimated damage states) is available.

3.2 Biaxial Loading Fatigue Tests and Experimental Validation

In the previous section it is found that the proposed prognosis model is capable of predicting the future damage states and remaining useful life under uniaxial fatigue loading. To validate the prognosis model under complex biaxial loading, another set of fatigue test was performed by applying bi-axial loading on a composite cruciform specimen. The composite cruciform specimen and the experimental setup can be seen in Fig. 7. To uniformly distribute the load in the web area of the cruciform specimen, two interface areas were machined by CNC machine at both front and back sides of the specimen. The dimensions of the specimen are shown in Fig. 8. The final failure of the cruciform specimen occurred due to the interface delamination in the web

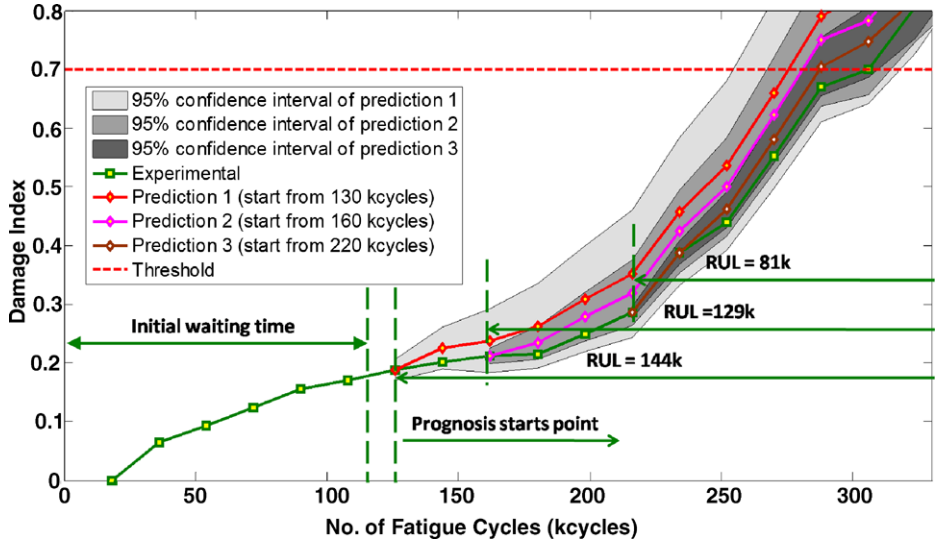

Fig. 6 Future damage state and RUL prediction

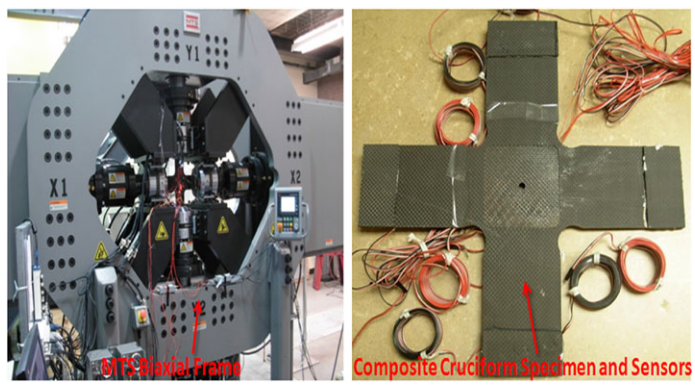

Fig. 7 Composite cruciform specimen and experimental setup

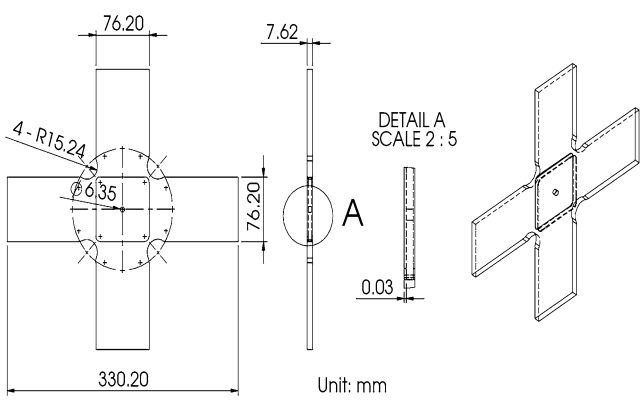

Fig. 8 Configuration of composite cruciform specimen

area. The specimen was subjected to a constant amplitude fatigue loading with maximum amplitude ($\sigma_{\max}$) of 25 kN and load ratio $R = 0.1$. It is noted that based on an uniaxial tensile tests with dog bone specimens, the yield stress is approximated as $\sigma_Y = 40$ kN. The specimen was loaded at a frequency of 10 Hz. It should be noted that both the x-axis and y-axis actuator of the biaxial frame were subjected to in-phase fatigue loading. Similar to uniaxial testing condition, for on-line state estimation, strain gage signals were used. One strain gage rosette was mounted in the web area of the cruciform specimen (gage area), and another strain gage rosette is mounted in the flange area (arm area). The strain gage signals were conditioned by an Omega OM2-163 strain gage amplifier and acquired using a 48 channel NI PXI DAQ system.

The damage state prediction for the composite biaxial loading test is performed recursively with multi-step ahead prediction method discussed before. The predicted or forecasted damage states with on-line data available up to certain fatigue instances are shown in Fig. 9. It is noticed that unlike the uniaxial case where first six damage states were sufficient to start the prediction algorithm correctly, for biaxial loading case the prediction algorithm waits several damage levels to forecast reasonably correct damage states. This is because damage state information (as estimated from on-line model) from the first several damage levels is not able to capture the complex damage growth dynamics of the structure. It is noted that the ideal waiting time is equivalent of 'd' damage levels ((8) and (9)), where 'd' is the input dimension of Gaussian process predictive model. Three prediction time-series and related 95% confidence intervals are

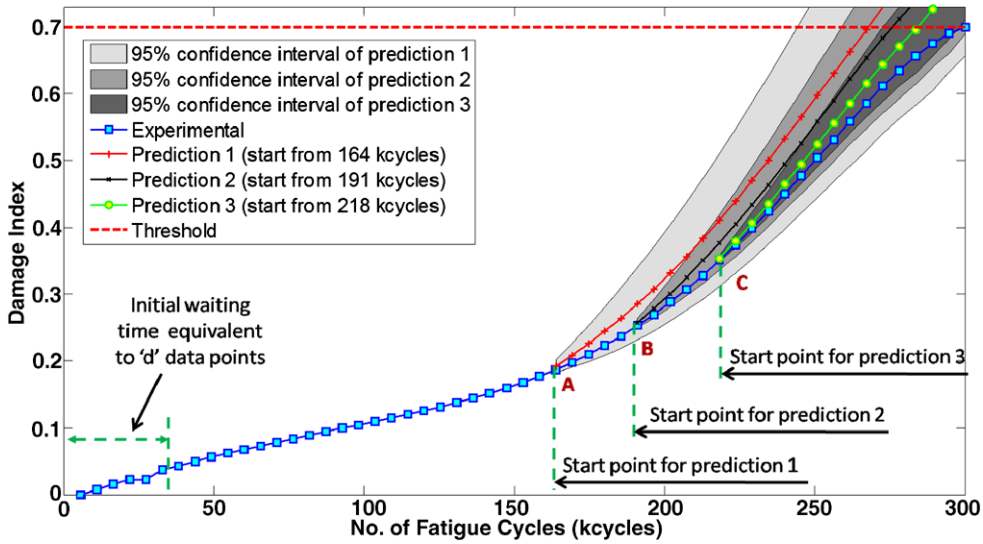

Fig. 9 Damage states and RUL prediction for composite cruciform specimen

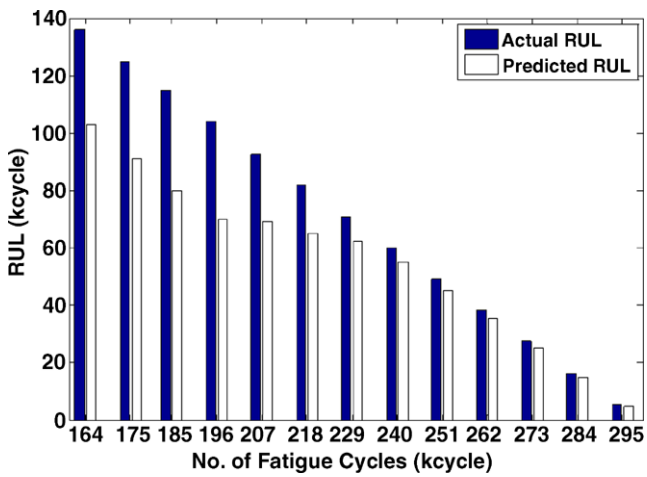

Fig. 10 Comparison of predicted RUL and actual RUL

shown in Fig. 9. They start from 164 kcycles, 191 kcycles and 218 kcycles, respectively. The predicted damage states correlate well with the actual damage states. The residual useful life at a given damage level up to which the on-line data was available is also forecasted. Figure 10 shows the comparison of predicted RUL and actual RUL calculated from the 160 kcycles to the failure of cruciform specimen. From Figs. 9 and 10, it is noticed that both the state prediction and RUL predictions are improved (i.e. close to actual) when more on-line information is available.

4 Conclusions

An integrated prognosis algorithm has been developed to forecast damage state and estimate RUL of composite test structures. The prognosis model combines two modules: (1) on-line damage state estimation model and (2) off-line damage state and RUL prediction model. A damage index formulation has been evaluated and used to extract fatigue damage states from real time strain gage measurements. Based on the on-line estimated damage states, the second stage Gaussian process predictive model is used to forecasts the future damage states and the corresponding remaining useful life. The accuracy of predicted states and RUL improved at the later stages of fatigue life as more on-line information or states became available to the predictive model. The prognosis model is validated for both uniaxial tensile fatigue test and biaxial fatigue test with custom manufactured carbon fiber reinforced epoxy matrix composite specimens. The proposed SHM and prognosis model is a self-supervised approach and it learns the dynamics occur to the composite specimens before estimating future damage states and RUL. To tackle extreme conditions, the algorithm can be trained with a full scale fatigue dataset that includes the extreme environmental loading cases. It is noted that the loading condition is assumed to be constant amplitude during the fatigue process. This is a reasonable start for the study of prognosis and RUL estimation for composite structures with complex failure mechanisms. The present approach needs to be modified if it is used for random loading conditions. Unknown future loading conditions needs to be introduced to the future damage state estimation model.

Acknowledgements The authors are grateful for the support of NASA Ames Research Center, Grant number: NNXO8AY51A. Edward Balaban is the program manager.

References

1. Philippidis, T.P., Passipoularidis, V.A.: Residual strength after fatigue in composites: theory vs. experiment. Int. J. Fatigue **29**(12), 2104–2116 (2007)

2. Boerstra, G.K.: A descriptive model for the fatigue behavior of fiber reinforced plastics. AE-Rotortechniek Report No. D0003301, October 2005
3. Degrieck, J., Van Paepegem, W.: Fatigue damage modeling of fiber-reinforced composite materials: review. Appl. Mech. Rev. **54**(4), 279–300 (2001)
4. Filis, P.A., Farrow, I.R., Bond, I.P.: Classical fatigue analysis and load cycle mix-event damage accumulation in fiber reinforced laminates. Int. J. Fatigue **26**(6), 565–573 (2004)
5. Epaarachchi, J.A.: A study on estimation of damage accumulation of glass fibre reinforced plastic (GFRP) composites under a block loading situation. Compos. Struct. **75**, 88–92 (2006)
6. Bond, I.P., Farrow, I.R.: Fatigue life prediction under complex loading for XAS/914 CFRP incorporating a mechanical fastner. Int. J. Fatigue **22**, 633–644 (2000)
7. MacKay, D.J.C.: Introduction to Gaussian processes. In: Bishop, C.M. (ed.) Neural Networks and Machine Learning. NATO Advanced Study Institute, vol. 168, pp. 133–165. Springer, Berlin (1998)
8. Mohanty, S., Das, S., Chattopadhyay, A., Peralta, P.: Gaussian process time series model for life prognosis of metallic structure. J. Intell. Mater. Syst. Struct. **20**(8), 887–896 (2009)
9. Kessler, S.S., Spearing, S.M., Soutis, C.: Damage detection in composite materials using lamb wave methods. In: Proceedings of the American Society for Composites, Blacksburg, VA, 9–12 September 2001
10. Su, Z., Ye, L., Lu, Y.: Guided Lamb waves for identification of damage in composite structures: a review. J. Sound Vib. **295**(3–5), 753–780 (2006)
11. Farrar, C.R., Worden, K., Todd, M.D., Park, G., Nichols, J., Adams, D.E., Bement, M.T., Farinholt, K.: Nonlinear system identification for damage detection. Los Alamos Report No. LA-14353 (2007)
12. Chang, F.K., Markmiller, J.F.C., Ihn, J.B., Cheng, K.Y.: A potential link from damage diagnostics to health prognostics of composites through built-in sensors. J. Vib. Acoust. **129**, 718–29 (2007)
13. Gobbato, M., Conte, J.P., Kosmatka, J.B., Oliver, J.A., Farrar, C.R.: Damage prognosis of adhesively-bonded joints in laminated composite structural components of unmanned aerial vehicles. In: COMPDYN 2009 ECCOMAS Thematic Conference on Computational Methods in Structural Dynamics and Earthquake Engineering, Rhodes, Greece, 2009
14. Gobbato, M., Conte, J.P., Kosmatka, J.B.: Reliability-based framework for damage prognosis of composite unmanned aerial vehicles structural components. In: Proc. Inaugural International Conf. of the Engineering Mechanics Institute, Minneapolis, MN, 2008
15. Mohanty, S., Chattopadhyay, A., Wei, J., Peralta, P.: Real time damage state estimation and condition based residual useful life estimation of a metallic specimen under biaxial loading. Structural Durability & Health Monitoring Journal, 2009 (invited paper)
16. Mohanty, S., Chattopadhyay, A., Peralta, P.: On-line life prediction of a structural hot-spot. In: ASME Conference on Smart Materials, Adaptive Structures and Intelligent Systems, Ellicot City, MD, USA, 2008
17. Büche, D., Schraudolph, N.N., Koumoutsakos, P.: Accelerating evolutionary algorithms with Gaussian process fitness function models. IEEE Trans. Syst. Man Cybern. **35**(2), 183–194 (2005). Special Issue on Knowledge Extraction and Incorporation in Evolutionary Computation—Part C